EMLED Series - EOE

MADE IN U.S.A.

PROJECT:
FIXTURE TYPE:
LOCATION:
CONTACT/PHONE:

The EOE features a die-cast aluminum housing designed for exterior use in wet locations, but is also often used in interiors with potential hard use situations, such as gymnasiums or hallways in apartment or condominium complexes. Ideal for any application requiring attractive unit equipment.

PRODUCT FEATURES

- Superior 40 foot center-to-center spacing
- Rugged die cast aluminum housing
- Molded prismatic polycarbonate lens
- Waterproof and suitable for cold installations to -20 degrees (standard model)
- Universal J-Box mounting or conduit feed
- High power LEDs and prismatic lens produce an optimized elongated pattern along the path of egress
- Over 50,000 hour lamp life in normal use
- Very low power consumption in night/security mode
- UL Standard 924 and NFPA Life Safety Code 101 compliant
- Automatic battery diagnostics available
- Power supply delivers regulated current and voltage to LED lamps at optimum levels to maximize lamp life
- Universal 120/277 VAC input
- Lamps are connected in parallel. If one lamp fails, one or more lamps will continue in operation
- Meets American Recovery & Reinvestment Act of 2009 (ARRA) requirements
- ETL listed 90 minute emergency run time, 24 hour recharge time
- Easy to install, snap together design
- Standard finishes: White and Bronze
- Optional cold weather package (-40°C to 30°C)
- Optional Self-Diagnostics available
- 5 year warranty

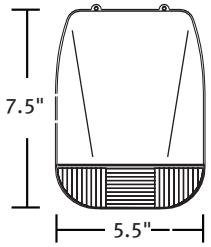

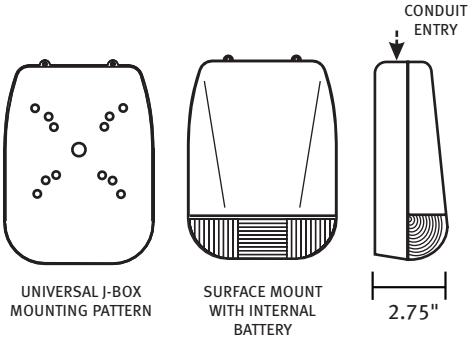

DESIGNED & MANUFACTURED IN THE USA

c ETL us LISTED Intertek CONFORMS TO UL 924/ CSA 22.2 #141

ORDERING INFORMATION

MODEL	OPERATION	POWER RATING	HOUSING COLOR	OPTIONS
EOE	BB = Battery Backup	**Battery Backup Models**	W = White	DG= Battery Diagnostics (BB Models Only)
	AC = AC Supply	7L2 = 7 Watts / 2 Lamp	B = Bronze	PH= Photocell Lighting Control (BB-DG Models Only)
	120/277	10L3 = 10 Watts / 3 Lamp	X = Custom	LT= Low Temp -40°C (BB Models Only)
		AC Models		TD20= 20 Minute Time Delay
		4 = 4 Watts		CTF= 90° Cutoff
		7 = 7 Watts		SB120= Security Lighting with Control Switch for Standard BB Operation (120V)
				SD277= Security Lighting with Control Switch for Standard BB Operation (277V)
				SD= Security Lighting with Control Switch for BB Operation with DG or LT
				Option (120/277V)
				SM = Surface Mount (AC Models Only)

Ordering Example: EOE-BB-10L3-B-DG

[1] Only available on units that have the DG option

EMLED Series - EOE

MADE IN U.S.A.

PROJECT:
FIXTURE TYPE:
LOCATION:
CONTACT/PHONE:

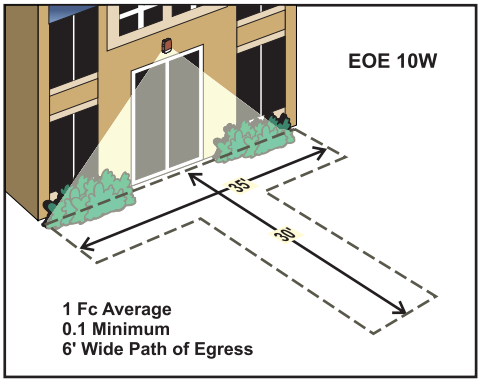

NOTE: TESTED IN ACCORDANCE WITH IES STANDARD LM-79-08 FOR SOLID STATE LIGHTING PRODUCTS. FOR REFERENCE ONLY. STANDARD REFLECTANCES 80/50/20. MULE IS NOT RESPONSIBLE FOR SPECIFIC CONDITIONS THAT MAY ALTER THE RESULTS. COMPLETE IES PHOTOMETRIC DATA AVAILABLE AT WWW.MULELIGHTING.COM FOR YOUR CONVENIENCE.

SUGGESTED SPECIFICATIONS

Install EMLED Series EOE Exterior Wall Mount LED emergency lighting fixture manufactured by Mule Lighting, Inc. Upon loss of AC building power, lighting will be activated for a minimum of 90 minutes under battery power, in compliance with UL 924 and NFPA Code 101. The battery charger and power supply shall have universal input of 120/277 VAC, with brownout and LVD circuit protection. Auto battery diagnostics shall be available for all models, as specified and shall perform all test functions specified by UL 924 and NFPA 101. Suitable for Wet Locations, with ambient temperature ranges specified below.

SELF-DIAGNOSTICS

The optional battery diagnostics (DG) continuously monitors the operating condition of the AC power, battery supply voltage, emergency lamp continuity and charging circuit.

The purpose of this option is to provide visual indication in response to a fault that may be occuring in the fixture.

The circuit will perform a 30 second discharge and self-test every 28-30 days. A 90 minute discharge and self-test is performed every 6 months.

STATUS	LED DISPLAY
NORMAL FULL CHARGE	GREEN ON
NORMAL FAST CHARGE	ORANGE ON
FAILED BATTERY	RED FLASH FAST
FAILED LAMP	GREEN FLASH
FAILED TRANSFER	ORANGE FLASH
FAILED CHARGER	RED FLASH SLOW

CONSTRUCTION

The EOE features a rugged, low-profile design with die-cast aluminum housing that includes a one-piece, molded, weatherproof gasket. The heat and impact resistant polycarbonate lens resists discoloration.

ILLUMINATION

Units can be supplied with LED's offering 7 watts or 10 watts of light output. The high performance LED's have an expected life of up to 50,000 hours with normal use.

ELECTRICAL

INPUT

Dual-voltage input 120 or 277VAC @ 60 Hz

BATTERY

Units are supplied with a Sealed Nickel Cadmium battery (NiCad) that is maintenance-free and has a 15 year life expectancy. NiCad batteries offer high discharge rates and perform optimally in temperatures ranging from 0-40 degrees C.

EMERGENCY

The EOE will operate for a minimum of 90 minutes during a loss of power and features a maximum recharge time of 24 hours for the battery.

The LED lamps are connected in parallel so if one lamp fails, the balance of the LED's will continue to operate. The power supply delivers a regulated current and voltage to the LED lamps to optimize the lamp life. A momentary test switch and indicator light are included.

INSTALLATION

The EOE unit is traditionally surface mounted utilizing a universal J-box mounting pattern and gasket or by using the conduit entry point at the top of the fixture.

OPTIONS

COLD LOCATION

The optional Low Temperature rating (LT) extends the temperature range to -40 degrees C (-40 degrees F) This is ideal for colder climates or freezer/cold room applications.

SECURITY/NIGHT LIGHTING

The optional Security/Night Lighting Control allows the fixture to be used as both an emergency lighting fixture and a security/night lighting fixture. Units with this option will operate each LED at 2 Watts offering 50% output when in security mode and connected to an active building AC supply and wired according to installation instructions. The security lighting circuit is independent of the emergency lighting and may be switched manually by exterior photocell or other automatic means.

WARRANTY

The EOE is supplied with a 5 year warranty. Any component that fails due to manufacturers defect is guaranteed for 5 years with a separate 5 year pro-rated warranty on the NiCad battery.